PRICE LIST 2005/a	EUROARMS ITALIA S.r.l. www.euroarms.net	
STOCK No.	SPARE PARTS - Enfield 1858 - 33" - percussion (parts different from 39")	
.EN 33-01	STOCK	calcio
.EN 33-02	BARREL	canna (solo tubo)
.EN 33-06	BAYONET STUD	gancio baionetta
.EN 33-08	FRONT BAND	fascetta anteriore
.EN 33-30	RAMROD	asta bacchetta
.EN 33-36	FRONT BAND SCREW	vite fascetta anteriore
.EN 33-50	STOCK WITH FURNITURE	calcio completo di ottoni
EN 033	BARREL WITH SIGHTS PROOF TESTED	canna completa di mire testata al BNP

ENFIELD 1858 - 33"

PART DIFFERENT FROM ENFIELD 1853 - 39"

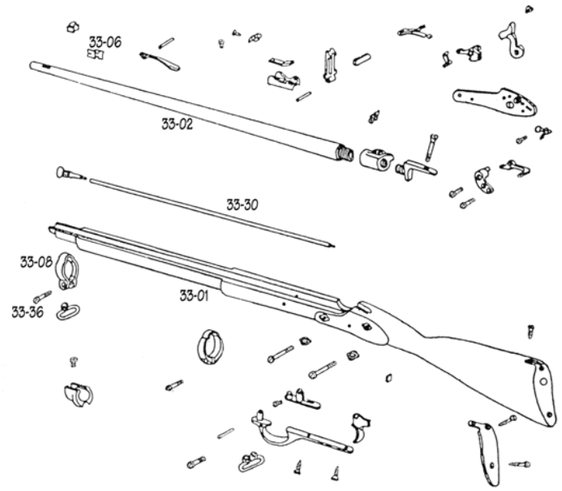

PRICE LIST 2005/a	EUROARMS ITALIA S.r.l. www.euroarms.net	
STOCK No.	SPARE PARTS - Enfield 1861 - 24" - percussion (parts different from 39")	
.EN 24-01	STOCK	calcio
.EN 24-02	BARREL	canna (solo tubo)
.EN 24-05	FRONT SIGHT	mirino
.EN 24-06	BAYONET STUD	gancio baionetta
.EN 24-07-01	REAR SIGHT BASE	base alzo
.EN 24-07-02	REAR SIGHT LEAF	ritto alzo
.EN 24-07-03	REAR SIGHT SLIDE	corsoio
.EN 24-07-04	REAR SIGHT BASE SPRING	molla zoccolo alzo
.EN 24-08	FRONT BAND	fascetta anteriore
.EN 24-14	TRIGGER GUARD	guardiamano
.EN 24-15	TRIGGER GUARD SWIVEL	attacco catenella copriluminello
.EN 24-19	SWIVEL REAR & SCREW	vite e portacinghia posteriore
.EN 24-30	RAMROD	asta bacchetta
.EN 24-36	FRONT BAND SCREW	vite fascetta anteriore
.EN 24-50	STOCK WITH FURNITURE	calcio completo di ottoni
EN 024	BARREL WITH SIGHTS PROOF TESTED	canna completa di mire testata al BNP
.EN 24-53	REAR SIGHT COMPLETE	tacca di mira completa

ENFIELD 1861 - 24"

PART DIFFERENT FROM ENFIELD 1853 - 39"

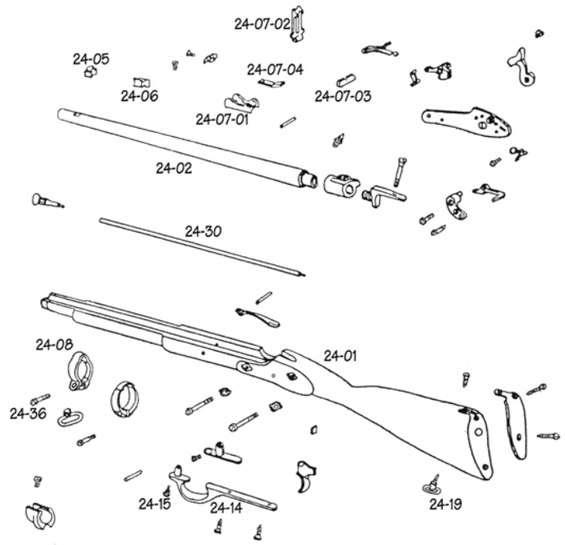

EUROARMS ITALIA S.r.l. - EUROARMS OF AMERICA Inc.

www.euroarms.net